CSU FULLERTON
STUDENT HOUSING PHASE III: BUILDING A-E
(EXTERIOR WALL PACKAGE)

GENERAL NOTES AND SPECIFICATIONS

1. ALL SECTIONS SHALL BE GALVANIZED, MANUFACTURED IN ACCORDANCE WITH THE LATEST AISI SPECIFICATION.
2. STUDS MAY HAVE 1-1/2" x 4" WEB CUT OUTS AT 24" OC, CUT OUTS SHALL NOT BE CLOSER THAN 12" FROM SECTION ENDS.
3. SECTION PROPERTIES ARE BASED UPON THE "STEEL STUD MANUFACTURE'S ASSOCIATION" (SSMA) CATALOG OF THE PARTICIPATING PRODUCERS, ICBO ER-4943-P SECTION SIZES ARE DENOTED THUS:

   600 S 162 – 54
   - MATERIAL THICKNESS IN 1/100 INCH (MILLS, SEE TABLE FOR GAUGE CONVERSION.
   - FLANGE WIDTH IN 1/100 INCH (162 = 1.625")
   - SECTION TYPE (S = C-STUD/JOIST, T = TRACK, U = U-CHANNEL, F = FURRING CHANNEL)
   - MEMBER DEPTH IN 1/100 INCH (600 = 6")
4. FASTENERS SHALL BE AS INDICATED ON PLANS AND DETAILS
5. ALL WELDING SHALL CONFORM TO THE LATEST AISI AND AWS SQUARE, TRUE TO SPECIFICATIONS. USE E60XX ELECTRODE.
6. USE RAMSET 1500 SERIES DRIVE PINS AT LIGHT GAUGE TO STEEL ATTACHMENT WHERE PDF ARE SPECIFIED ON PLANS, DETAILS & NOTES.
7. FABRICATE COLD FORMED METAL FRAMING AND ACCESSORIES PLUMB, LINE, AND CONFORM WITH CONNECTORS SECURELY FASTENED.
   A . CUT FRAMING MEMBERS BY SAWING OR SHEARING; DO NOT TORCH CUT
   B . FASTEN COLD FORMED METAL FRAMING WITH SCREW FASTENING.
   WIRE TYING OF FRAMING MEMBERS IS NOT PERMITTED.
   1. COMPLY WITH AWS REQUIREMENTS AND PROCEDURES FOR WELDING APPEARANCE AND QUALITY OF WELDS, AND METHODS USED IN CORRECTING WELDING WORK.
   2. LOCATE MECHANICAL FASTENERS AND INSTALL WITH SCREW PENETRATING JOINED MEMBERS BY NOT LESS THAN 3 EXPOSED SCREW THREADS.
8. REINFORCE STIFFEN AND BRACE FRAMING ASSEMBLIES TO WITHSTAND HANDELING, DELIVERY, AND ERECTION STRESSES. LIFT FABRICATED ASSEMBLIES TO PREVENT DAMAGE OR DISTORTION.
9. INSTALL COLD-FORMED METAL FRAMING AND ACCESSORIES PLUMB, SQUARE, TRUE TO LINE, AND WITH CONNECTIONS SECURELY FASTENED, ACCORDING TO MFR RECOMMENDATIONS.
   A . CUT FRAMING MEMBERS BY SAWING OR SHEARING; DO NOT TORCH CUT .
   B . FASTEN COLD FORMED METAL FRAMING WITH SCREW FASTENING.
   WIRE TYING OF FRAMING MEMBERS IS NOT PERMITTED.
   1. COMPLY WITH AWS REQUIREMENTS AND PROCEDURES FOR WELDING APPEARANCE AND QUALITY OF WELDS, AND METHODS USED IN CORRECTING WELDING WORK.
   2. LOCATE MECHANICAL FASTENERS AND INSTALL WITH SCREW PENETRATING JOINED MEMBERS BY NOT LESS THAN 3 EXPOSED SCREW THREADS.
10. INSTALL FRAMING MEMBERS IN ONE-PIECE LENGTHS, UNLESS SPLICE CONNECTIONS ARE INDICATED FOR TRACK OR TENSION MEMBERS.
11. INSTALL COLD-FORMED METAL FRAMING TO A MAXIMUM ALLOWABLE TOLERANCE VARIATION FROM PLUMB, LEVEL, AND TRUE TO LINE OF 1/8" IN 10'-0".
    A. SPACE INDIVIDUAL FRAMING MEMBERS NO MORE THAN 1/8 ± FROM PLAN LOCATION. CUMULATIVE ERROR SHALL NOT EXCEED MIN FASTENING REQUIREMENTS OF SHEATHING OF OTHER FINISHING MATERIAL.
12. SECURELY SEAT STUDS AGAINST WEBS OF TOP AND BOTTOM TRACKS. FASTEN BOTH FLANGES TO STUDS AT TOP AND BOTTOM OF TRACK.
13. SET STUDS PLUMB, EXCEPT AS REQUIRED FOR DIAGONAL BRACING FOR NONPLUMB WALLS OR WARPED SURFACES.

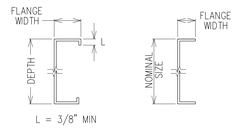

METAL TO METAL FASTENER SIZE	
METAL THICKNESS "T"	SCREW TYPE
T < 97 MIL	#10 W/ #2 POINT
97 MIL < T < 1/4"	#10 W/ #3 POINT
1/4" < T < 1/2"	#10 W/ #5 POINT

MATERIAL THICKNESS (MILLS)	GAUGE
18	25
27	22
33	20
43	18
54	16
68	14
97	12

DESIGN CRITERIA

A. DESIGN LOADS:
   WIND:
   - EXPOSURE: B
   - BASIC WIND SPEED: 85 mph
   - IMPORTANCE FACTOR: 1.0

   SEISMIC:
   - SEISMIC DESIGN CATEGORY: D
   - SITE CLASS: D
   - DESIGN SHORT PERIOD ACCEL: Ss = 1.72g
   - IMPORTANCE FACTOR: 1.0

B. WIND LOAD DEFLECTION L/360

COLD FORMED STEEL

1. ALL WORK SHALL MEET THE REQUIREMENTS OF THE FOLLOWING STANDARDS
2.
3. A. AMERICAN IRON AND STEEL INSTITUTE (AISI) DESIGN OF COLD FORMED STEEL STRUCTURAL MEMBERS
   B. AMERICAN WELDING SOCIETY (AWS) D1 1 AND D1 3 SPECIFICATION FOR WELDING SHEET STEEL IN STRUCTURAL
   C. AMERICAN SOCIETY FOR TESTING AND MATERIALS (ASTM)
4. ALL STUD AND TRACK MATERIAL TO CONFORM TO THE FOLLOWING
   A. 54 MIL AND HEAVIER
      50 KSI MIN YEILD, 65 KSI MIN TENSILE STRENGTH
      PAINTED STEEL PER ASTM A570 – GRADE 50
      GALVANIZED STEEL PER ASTM A653 – GRADE 50
   B. 43 MIL AND LIGHTER
      33 KSI MIN YEILD, 45 KSI MIN TENSILE STRENGTH
      PAINTED STEEL PER ASTM A611 – GRADE C
      GALVANIZED STEEL PER ASTM A653 – GRADE 33
5. MISCELLANEOUS STEEL TO CONFORM TO THE FOLLOWING
   A. 30 MIL – 43 MIL 33 KSI MIN YIELD
   B. 54 MIL – 97 MIL 50 KSI MIN YIELD
   C. 3/16" AND HEAVIER ASTM A36
6. ALL WELDING TO BE PERFORMED BY CERTIFIED COLD FORMED STEEL WELDERS CERTIFIED FOR ALL APPROPRIATE DIRECTION COMPLYING WITH AWS D1 3 WELDING RODS TO CONFORM TO THE FOLLOWING
   A. 43 MIL AND LIGHTER E60XX
   B. 54 MIL AND HEAVIER E60XX
   C. COLD FORMED TO STRUCTURAL STEEL E60XX

ABBREVIATION

@	AT
#	DIAMETER
#	NUMBER
AB	ANCHOR BOLT
APPROX	APPROXIMATE(LY)
ARCH.	ARCHITECT(URAL)
BLK	BLOCK
BLKG	BLOCKING
BLDG	BUILDING
BM	BEAM
BN	BOUNDARY NAILING
BOT	BOTTOM
BOF	BOTTOM OF FOOTING
℄	CENTER LINE
CIDH	CAST IN DRILLED HOLE
CJ	CONSTRUCTION JOINT
CJP	COMPLETE JT PENETRATION
CLR	CLEAR
CLG	CEILING
CMP	CORRUGATED METAL PIPE
COL	COLUMN
CONC	CONCRETE
CONN	CONNECTION
CONST	CONSTRUCTION
CONT	CONTINUOUS
CSK	COUNTERSINK
DBL	DOUBLE
DET	DETAIL
DF	DOUGLAS FIR
DIAG	DIAGONAL
DN	DOWN
DO	DITTO
DWG	DRAWING
(E)	EXISTING
EA	EACH
EL	ELEVATION
ELEV	ELEVATOR
EN	EDGE NAILING
EQ	EQUAL
EW	EACH WAY
FBC	FRAMED BEAM CONN
FIN	FINISH(ED)
FND	FOUNDATION
FOC	FACE OF CONCRETE
FOM	FACE OF MASONRY
FOS	FACE OF STUD(S)
FP	FULL PENETRATION
FS	FAR SIDE
FTG	FOOTING
Ga	GAUGE
GALV	GALVANIZED
GL	GLUED LAMINATED BEAM
HDR	HEADER
HEX	HEXAGONAL
HGR	HANGER
HORIZ	HORIZONTAL
HSB	HIGH STRENGTH BOLT
HSS	HOLLOW STRUCT SECTION
HT	HEIGHT
ID	INSIDE DIAMETER
INSP	INSPECTION/INSPECTOR
INSUL	INSULATION
JT	JOINT
LAG	LAG SCREW(S)
LL	LIVE LOAD
LLBB	LONG LEGS BACK TO BACK
LLH	LONG LEG HORIZONTAL
LLV	LONG LEG VERTICAL
LOC	LOCATION
LW	LIGHT WEIGHT
MB	MACHINE BOLT(S)
MAX	MAXIMUM
MECH	MECHANICAL
MFR	MANUFACTURER
MIN	MINIMUM
MISC	MISCELLANEOUS
(N)	NEW
NIC	NOT IN CONTRACT
No.	NUMBER
NOM	NOMINAL
NS	NEAR SIDE
NTS	NOT TO SCALE
OC	ON CENTER
OD	OUTSIDE DIAMETER
OH	OPPOSITE HAND
OPP	OPPOSITE
OWSJ	OPEN WEB STEEL JOIST
PL	METAL PLATE
PDF	POWDER DRIVEN FASTENER
PTDF	PRESS. TREATED DOUG. FIR
PLY	PLYWOOD
PJP	PARTIAL JOINT PENETRATION
PSF	POUNDS PER SQUARE FOOT
PSI	POUNDS PER SQUARE INCH
PT	POINT OR POST TENSION
RAD OR R	RADIUS
RCP	REINF CONC PIPE
REINF	REINFORCED, REINFORCING
REQ'D	REQUIRED
REV	REVISION
RS	ROUGH SAWN
RWD	REDWOOD
S.A.D.	SEE ARCH. DRAWINGS
SCHED	SCHEDULE
SEC	SECTION
SHT	SHEET
SHTG	SHEATHING
SIM	SIMILAR
SM	SHEETMETAL
SMS	SHEET METAL SCREW
SPEC(S)	SPECIFICATION(S)
SQ	SQUARE
STAG	STAGGERED
STD	STANDARD
STL	STEEL
STS	SELF TAPPING SCREW
STRUCT	STRUCTURAL
SYM	SYMMETRICAL
T&G	TONGUE AND GROOVE
TBR	TO BE REMOVED
T.O.	TOP OF
TOF	TOP OF FOOTING
T.O.P.	TOP OF PLATE
TOS	TOP OF SLAB OR STEEL
T.O.W.	TOP OF WALL
TYP	TYPICAL
U.N.O.	UNLESS NOTED OTHERWISE
VERT	VERTICAL
W/	WITH
WF	WIDE FLANGE
WP	WATERPROOF OR WORK POINT
WT	WEIGHT
WWF	WELDED WIRE FABRIC

SHEET INDEX

S1.00 COVER SHEET AND GENERAL NOTES
S2.01 BUILDING A & B FLOOR PLANS
S2.02 BUILDING A, B & C FLOOR PLANS
S2.03 BUILDING A, B & C FLOOR PLANS
S2.04 BUILDING A, B & C FLOOR PLANS
S2.05 BUILDING A, B & C FLOOR PLANS
S2.06 BUILDING D FLOOR PLANS
S2.07 BUILDING D FLOOR PLANS
S2.08 BUILDING D FLOOR PLANS
S2.09 BUILDING D FLOOR PLANS
S2.10 BUILDING E FLOOR PLANS
S2.11 BUILDING E FLOOR PLANS
S2.12 BUILDING E FLOOR PLANS
S2.13 BUILDING E FLOOR PLANS
S3.01 BUILDING A ELEVATIONS
S3.02 BUILDING A ELEVATIONS
S3.03 BUILDING A ELEVATIONS
S3.04 BUILDING B ELEVATIONS
S3.05 BUILDING B ELEVATIONS
S3.06 BUILDING B ELEVATIONS
S3.07 BUILDING C ELEVATIONS
S3.08 BUILDING C ELEVATIONS
S3.09 BUILDING C ELEVATIONS
S3.10 BUILDING D ELEVATIONS
S3.11 BUILDING D ELEVATIONS
S3.12 BUILDING D ELEVATIONS
S3.13 BUILDING E ELEVATIONS
S3.14 BUILDING E ELEVATIONS
S3.15 BUILDING E ELEVATIONS
S4.01 BUILDING A, B & C WALL SECTIONS
S4.02 BUILDING A, B & C WALL SECTIONS
S4.03 BUILDING A, B & C WALL SECTIONS
S4.04 BUILDING A, B & C WALL SECTIONS
S4.05 BUILDING A, B & C WALL SECTIONS
S4.06 BUILDING C WALL SECTIONS
S4.07 BUILDING D & E WALL SECTIONS
S4.08 BUILDING D & E WALL SECTIONS
S5.00 DETAILS
S5.01 DETAILS
S5.02 DETAILS
S5.03 DETAILS
S5.04 DETAILS
S5.05 DIETRICH HDS DETAILS

REGISTERED PROFESSIONAL ENGINEER MARCUS R. ROBINSON No. S4983 Exp. 9/30/10 STRUCTURAL OF CALIFORNIA

11/10/09

REV.	DESCRIPTION	DATE
	INITIAL SUBMITTAL	09/01/09
1	BACK CHECK COMMENTS 9/03/09	10/05/09
2	BACK CHECK COMMENTS 10/13/09	11/10/09

DRAWING STATUS	DATE	INITIALS
■ SUBMITTAL		MBR
■ REDLINE COMPLETION		
■ APPROVED		
■ ISSUED FOR FABRICATION		

CONSULTANT:
I. S. A. T.
International Seismic Application Technology
42550 ALBREA ST. FREMONT, CA 94538
800-835-9941 (US) 510-226-8778 (fax)
www.isatsb.com

CSU FULLERTON COVER SHEET & GENERAL NOTES
STUDENT HOUSING PHASE III (BUILDING A-E)
800 N STATE COLLEGE BLVD FULLERTON, CALIFORNIA 92834

SCALE: AS NOTED
DRAWN BY: JM
DATE: 08-15-09
SHEET #

S1.00

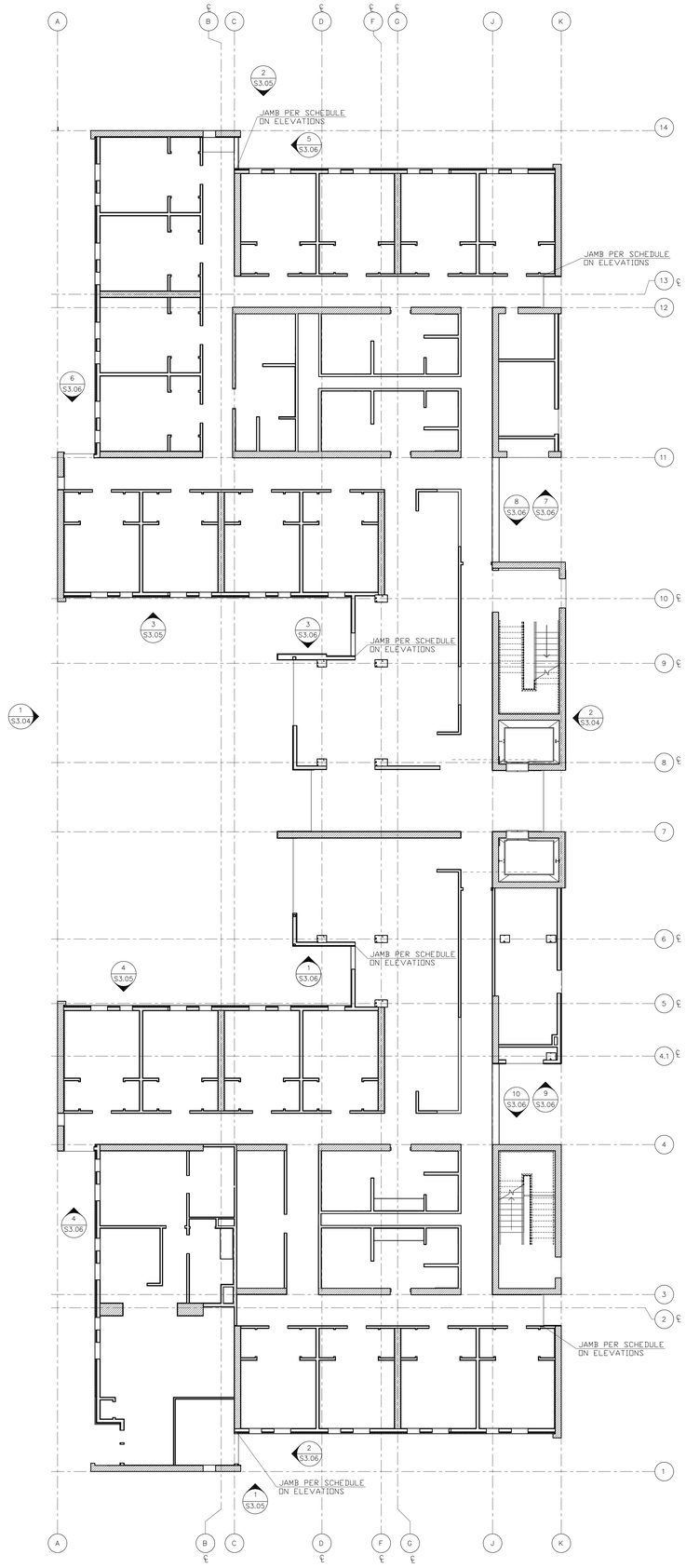

FIRST FLOOR PLAN – BUILDING B 2
(REF ARCH 2/A2.01)
SCALE: 1/8" = 1'-0"

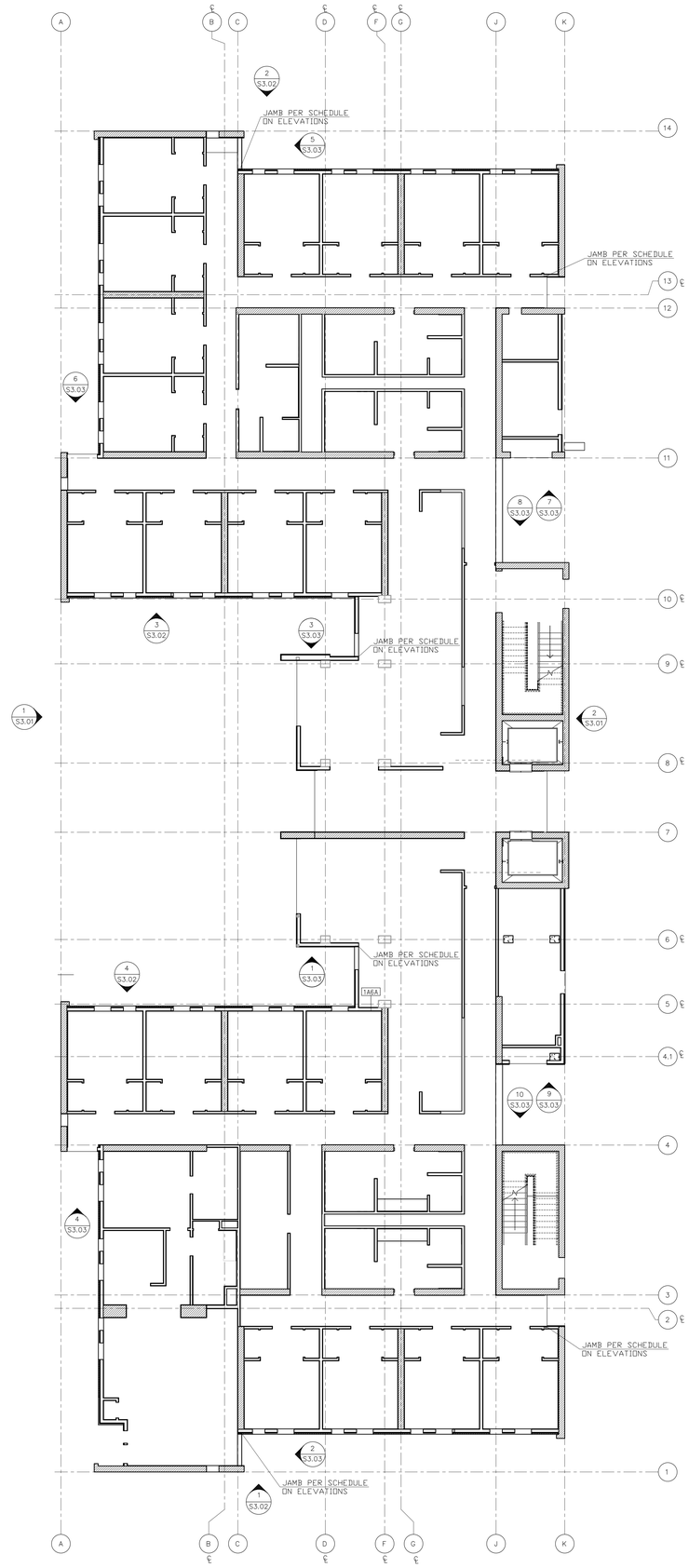

FIRST FLOOR PLAN – BUILDING A 1
(REF ARCH 1/A2.01)
SCALE: 1/8" = 1'-0"

DRAWING STATUS	DATE	INITIALS	REV.	DESCRIPTION	DATES:
SUBMITTAL		MBR		INITIAL SUBMITTAL	09/01/09
REDLINE COMPLETION			1	BACK CHECK COMMENTS 9/03/09	10/05/09
APPROVED			2	BACK CHECK COMMENTS 10/13/09	11/10/09
ISSUED FOR FABRICATION					

CONSULTANT:

I. S. A. T.
International Seismic Application Technology
42550 ALBREA ST. FREMONT, CA 94538
800-635-9941 (US) 510-226-8776 (fax)
www.isatsb.com

CSU FULLERTON BUILDING A & B FLOOR PLANS
STUDENT HOUSING PHASE III (BUILDING A-E)
800 N STATE COLLEGE BLVD FULLERTON, CALIFORNIA 92834

REGISTERED PROFESSIONAL ENGINEER
MARK D. ROBINSON
No. 54983
Exp. 9/30/10
STRUCTURAL
STATE OF CALIFORNIA

11/10/09

SCALE: 3/32" = 1'-0"
DRAWN BY: JM
DATE: 08-15-09
SHEET #

S2.01

BUILDING A EAST ELEVATION 2
(REF ARCH 2/A3.01)
SCALE: 1/8" = 1'-0"

NOTES:

1. HSS JAMB, HEADER, AND SILL. S.S.D.
2. SEE DETAIL 9/S5.0 FOR TYPICAL WALL INTERSECTION AND CORNER DETAIL
3. SEE DETAIL 5/S5.0 FOR TYPICAL BRIDGING DETAIL
4. SEE DETAIL 2/S5.0, 3/S5.0 & 4/S5.0 FOR TYPICAL BACKING DETAIL
5. SEE DETAIL 6/S5.0 FOR TYPICAL SPLICE DETAIL
6. SEE DETAIL 9/S5.01 & 10/S5.01 FOR TYPICAL HEADER TO JAMB DETAIL
7. SEE DETAIL 11/S5.01 FOR TYPICAL JAMB TO SILL DETAIL
8. SEE DETAIL 12/S5.01 FOR TYPICAL END OF DOOR JAMB DETAIL
9. SEE DETAIL 7/S5.01 & 8/S5.01 FOR TYPICAL HEADER TO CMU WALL DETAIL
10. SEE DETAIL 7/S5.00 FOR TYPICAL TOP TRACK DETAIL
11. SEE DETAIL 8/S5.00 FOR TOP TRACK AT OFFSET PLANK DETAIL
12. SEE DETAIL 13/S5.01 FOR JAMB TO TOP TRACK DETAIL

STUD SCHEDULE

MAX STUD HT	6" STUD
10'-0" W/ 8" CONC. BLOCK VENEER	600S162-43 @ 16" O.C.
6'-0"	600S162-33 @ 16" O.C.
10'-0"	600S162-43 @ 16" O.C.
14'-0"	600S162-43 @ 16" O.C.
16'-0"	600S162-54 @ 16" O.C.

JAMB SCHEDULE

MARK	SSMA SIZE	DIETRICH HDS JAMB OPTION	SSMA DETAIL	HDS DETAIL
J-1	(1)600S162-43		1/S5.01	
J-2	(1)600S162-54		1/S5.01	
J-3	(1)600S162-54		1/S5.01	
J-4A	(2)1200S162-68 +(2)600T125-68		6/S5.02	
J-4B	(1)600S162-54		1/S5.01	
J-4C	(1)600S162-54		1/S5.01	
J-5	(1)600S162-54		1/S5.01	
J-6	(1)600S162-54		1/S5.01	3/S5.05
J-7	(1)600S162-68	6"x54MILS HDS W/ 5⅝"x43MILS HDSC	1/S5.01	3/S5.05
J-8		6"x68MILS HDS W/ 5⅝"x43MILS HDSC		3/S5.05
J-9	(2)600S162-43 +(2)600T125-43		2/S5.01	

HEADER SCHEDULE

MARK	SSMA SIZE	DIETRICH HDS HEADER OPTION	SSMA DETAIL	HDS DETAIL
H-1	(1)600T125-54		3/S5.01	
H-2	(1)600T125-68	6"x33MILS HDS W/ 5⅝"x33MILS HDSC	3/S5.01	1/S5.05
H-3		6"x33MILS HDS W/ 5⅝"x33MILS HDSC		1/S5.05
H-4	(2)1200S162-68 +(2)600T125-68		2/S5.02	
H-5		6"x33MILS HDS W/ 5⅝"x33MILS HDSC		△1
H-6		6"x43MILS HDS W/ 5⅝"x33MILS HDSC		1/S5.05
H-7		6"x54 MILS HDS W/ 5⅝"x43MILS HDSC		1/S5.05
H-8		6"x43MILS HDS W/ 5⅝"x43MILS HDSC		1/S5.05
H-9	(2)600S162-43 +(2)600T125-43		4/S5.01	

SILL SCHEDULE

MARK	SSMA SIZE	DIETRICH HDS SILL OPTION	SSMA DETAIL	HDS DETAIL
S-1	(1)600T125-43		5/S5.01	
S-2	(1)600T125-43		5/S5.01	
S-3	(1)600T125-54		5/S5.01	
S-4		6"x43MILS HDS W/ 5⅝"x33MILS HDSC		2/S5.05
S-6	(1)600T125-68	6"x54MILS HDS W/ 5⅝"x43MILS HDSC	5/S5.01	
S-7		6"x54MILS HDS W/ 5⅝"x43MILS HDSC		2/S5.05
S-8	(1)600T125-54		5/S5.01	

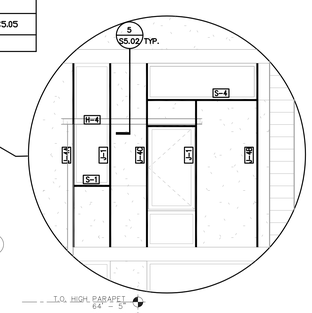

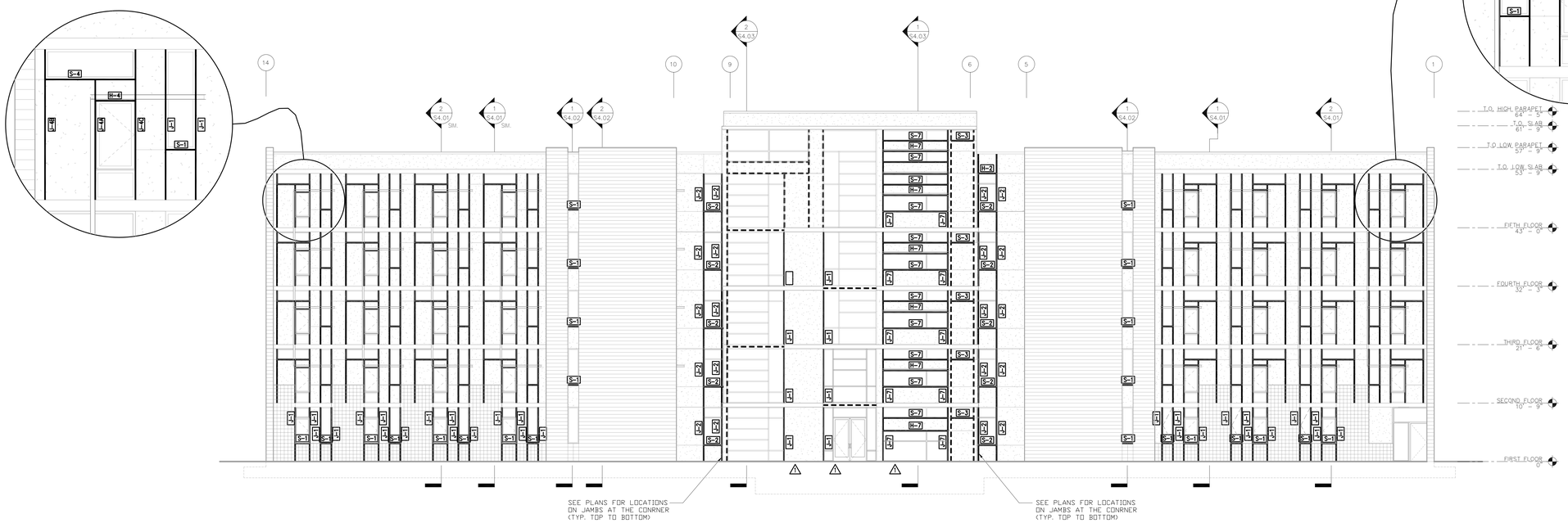

BUILDING A WEST ELEVATION 1
(REF ARCH 1/A3.01)
SCALE: 1/8" = 1'-0"

DRAWING STATUS	DATE	INITIALS	REV.	DESCRIPTION	DATES:
■ SUBMITTAL		MBR		INITIAL SUBMITTAL	09/01/09
■ REDLINE COMPLETION			△1	BACK CHECK COMMENTS 9/03/09	10/05/09
■ APPROVED			△2	BACK CHECK COMMENTS 10/13/09	11/10/09
■ ISSUED FOR FABRICATION					

CONSULTANT:

I. S. A. T.
International Seismic Application Technology
42550 ALBRAE ST. FREMONT, CA 94538
800-635-9941 (US) 510-226-9776 (fax)
www.isatsb.com

CSU FULLERTON BUILDING A ELEVATIONS
STUDENT HOUSING PHASE III (BUILDING A-E)
800 N STATE COLLEGE BLVD FULLERTON, CALIFORNIA 92834

REGISTERED PROFESSIONAL ENGINEER MICHAEL B. RODRIGUEZ No. S4983 Exp. 9/30/10 STRUCTURAL STATE OF CALIFORNIA

11/10/09

SCALE:
DRAWN BY: JM
DATE: 08-15-09
SHEET #

S3.01

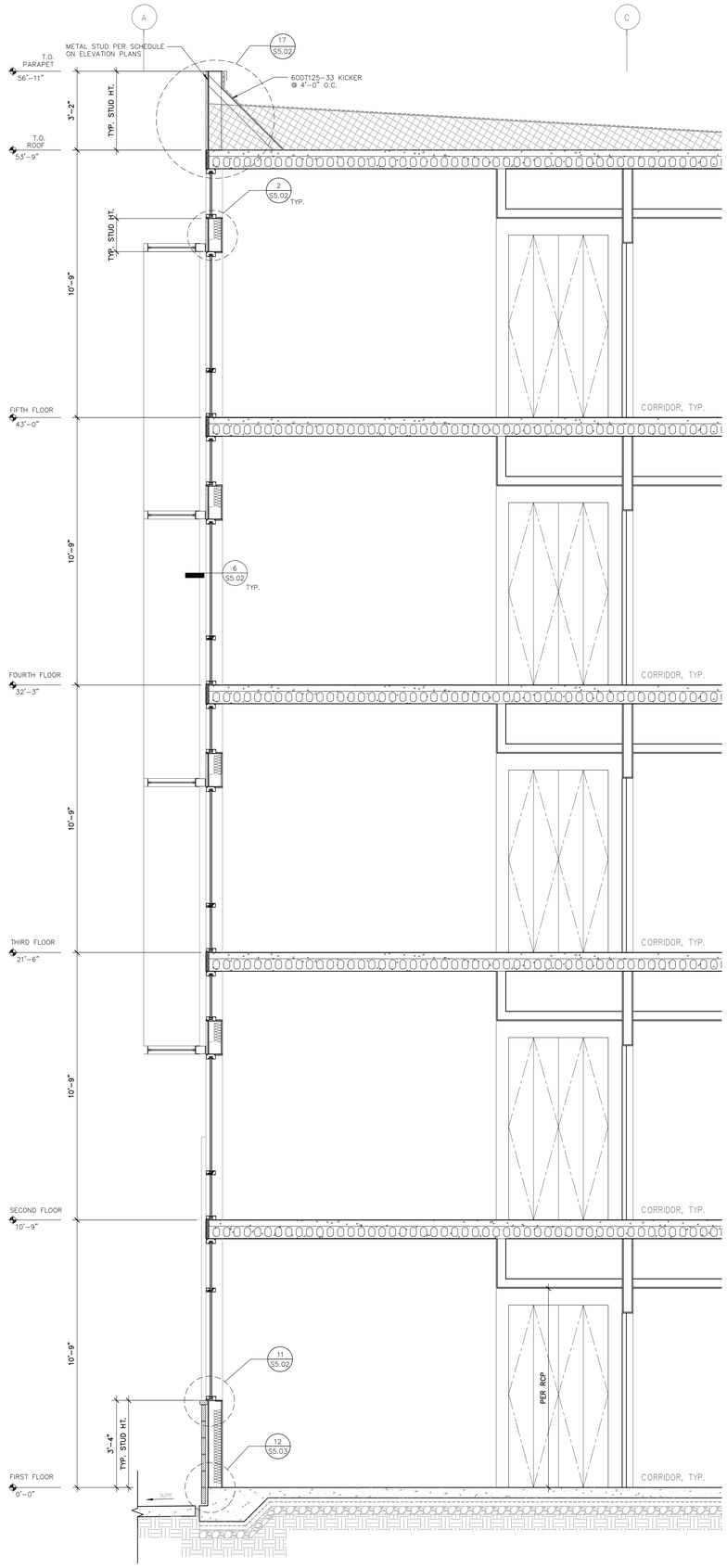

BUILDLING A, B & C – WALL SECTION 2
(REF ARCH 2/A3.31)
SCALE: 1/2" = 1'-0"

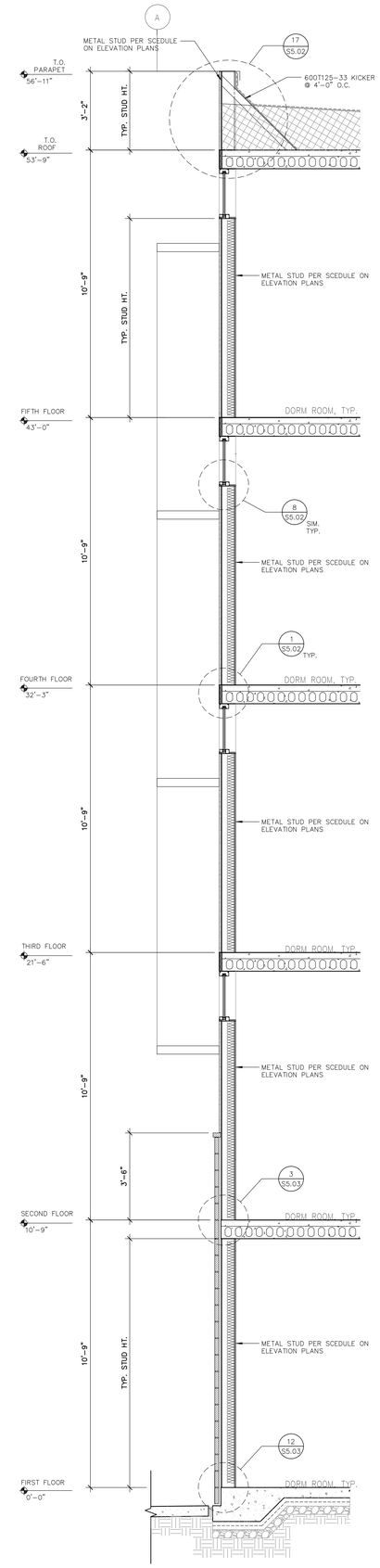

BUILDLING A, B & C – WALL SECTION 1
(REF ARCH 1/A3.31)
SCALE: 1/2" = 1'-0"

REGISTERED PROFESSIONAL ENGINEER
MARK D. ROBINSON
No. S4983
Exp. 9/30/10
STRUCTURAL
STATE OF CALIFORNIA

11/10/09

REV.	DESCRIPTION	DATES:
	INITIAL SUBMITTAL	09/01/09
1	BACK CHECK COMMENTS 9/03/09	10/05/09
2	BACK CHECK COMMENTS 10/13/09	11/10/09

DRAWING STATUS	DATE	INITIALS
SUBMITTAL		MBR
REDLINE COMPLETION		
APPROVED		
ISSUED FOR FABRICATION		

CONSULTANT:

I. S. A. T.
International Seismic Application Technology
42550 ALBREA ST. FREMONT, CA 94538
800-835-9941 (US) 510-226-8776 (fax)
www.isatsb.com

CSU FULLERTON BUILDING A, B, & C WALL SECTIONS
STUDENT HOUSING PHASE III (BUILDING A-E)
800 N STATE COLLEGE BLVD FULLERTON, CALIFORNIA 92834

SCALE:
DRAWN BY: JM
DATE: 08-15-09
SHEET #

S4.01

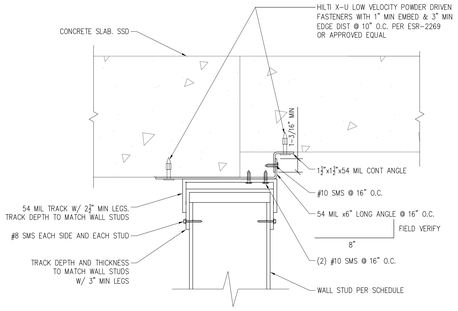

8 TOP TRACK AT OFFSET PLANK DETAIL

Scale: N.T.S.

NOTES:
1. EXTEND BACKING PLATE WEB TO FAR SIDE OF NEXT ADJACENT STUD BEYOND FACE OF FIXTURE OR ACCESSORY.
2. PROVIDE METAL SLEEVES THROUGH WALL FINISH AT FIXTURE & EQUIPMENT FASTENING.
3. COORDINATE WITH OTHER TRADES FOR ANCHORAGE OF OTHER EQUIPMENT.

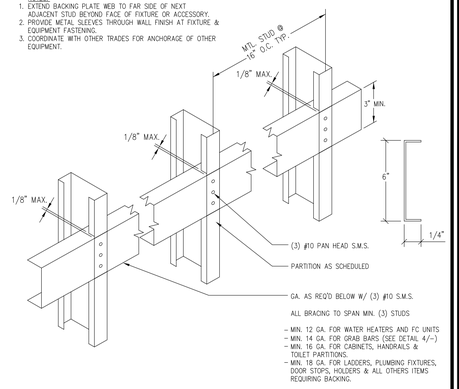

4 WALL BACKING PLATE
(REF ARCH DETAIL 3/A8.04)

Scale: 3" = 1'-0"

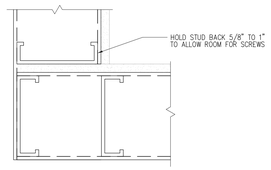

TYPICAL CORNER ALTERNATE

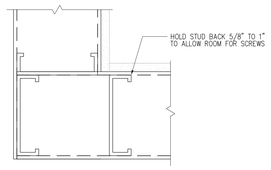

TYPICAL CORNER

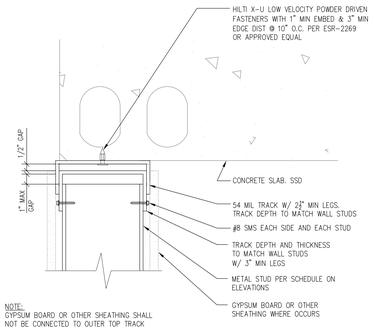

NOTE:
GYPSUM BOARD OR OTHER SHEATHING SHALL NOT BE CONNECTED TO OUTER TOP TRACK

7 TYPICAL NESTED TOP TRACK

Scale: N.T.S.

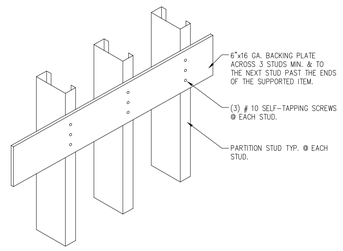

NOTE:
THIS DETAIL MAY BE USED AT OVERHEAD, FULL HEIGHT & BASE CABINETS, GRAB BARS, HANDRAILS, SHOWER SEATS, EQUIPMENT DISTRIBUTING LESS THAN 20 LBS/STUD (CENTER OF GRAVITY SHALL BE 6" MAX. FROM FACE OF STUD.

3 BACKING PLATE
(REF ARCH DETAIL 1/A8.04)

N.T.S.

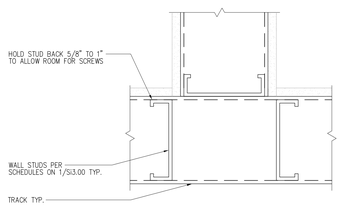

TYPICAL INTERSECTION ALTERNATE

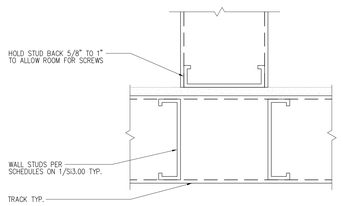

TYPICAL INTERSECTION ALTERNATE

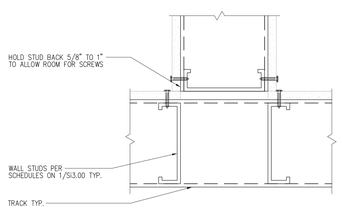

TYPICAL INTERSECTION

9 TYPICAL WALL INTERSECTION AND CORNER DETAILS

Scale: 3" = 1'-0"

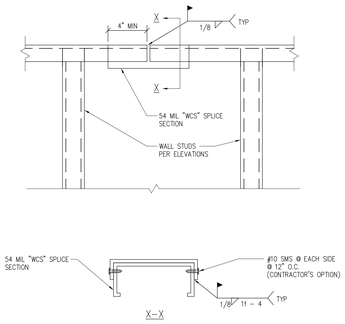

6 TYPICAL SPLICE DETAIL

Scale: 3" = 1'-0"

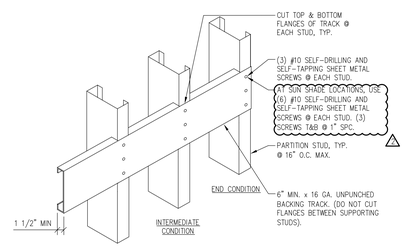

NOTE:
THIS DETAIL MAY BE USED @ EQUIPMENT & CASEWORK DISTRIBUTING 100 LB/STUD MAX. (CENTER OF GRAVITY SHALL BE 6" MAX. FROM FACE OF STUD).

2 BACKING TRACK
(REF ARCH DETAIL 2/A8.04)

N.T.S.

NOTES:

1. BRIDGING FOR ANY SIZE STUDS MAY BE CONSTRUCTED OF COLD ROLLED CHANNEL OR STRAPS AT CONTRACTORS OPTION UNLESS OTHERWISE NOTED.

2. WHERE FULL HEIGHT SHEATHING OCCURS ON BOTH SIDES OF METAL STUD FRAMING, THE BRIDGING MAY BE OMITTED.

3. WHERE STRAP BRIDGING OCCURS AT WALLS SHEATHED ONLY ON ONE SIDE, STRAP MAY BE OMITTED ON THE SHEATHING SIDE.

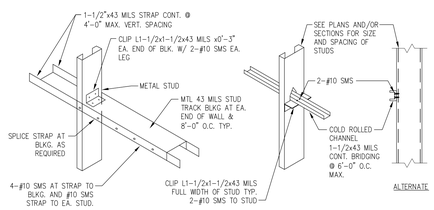

STRAP BRIDGING FOR ANY SIZE STUD

COLD ROLLED CHANNEL BRIDGING FOR ANY SIZE STUD

5 TYPICAL BRIDGING DETAIL

Scale: N.T.S.

11/10/09

DATE:	DESCRIPTION	REV.	DATE	INITIALS
09/01/09	INITIAL SUBMITTAL			MBR
10/05/09	BACK CHECK COMMENTS 9/03/09	1		
11/10/09	BACK CHECK COMMENTS 10/13/09	2		

DRAWING STATUS	
■	SUBMITTAL
■	REDLINE COMPLETION
■	APPROVED
■	ISSUED FOR FABRICATION

CONSULTANT:

I. S. A. T.
International Seismic Application Technology
42550 ALBREA ST. FREMONT, CA 94538
800-835-9941 (US) 510-226-9776 (fax)
www.isatsb.com

CSU FULLERTON TYPICAL DETAILS
STUDENT HOUSING PHASE III (BUILDING A-E)
800 N STATE COLLEGE BLVD FULLERTON, CALIFORNIA 92834

SCALE:
DRAWN BY: JM
DATE: 08-15-09
SHEET #

S5.00

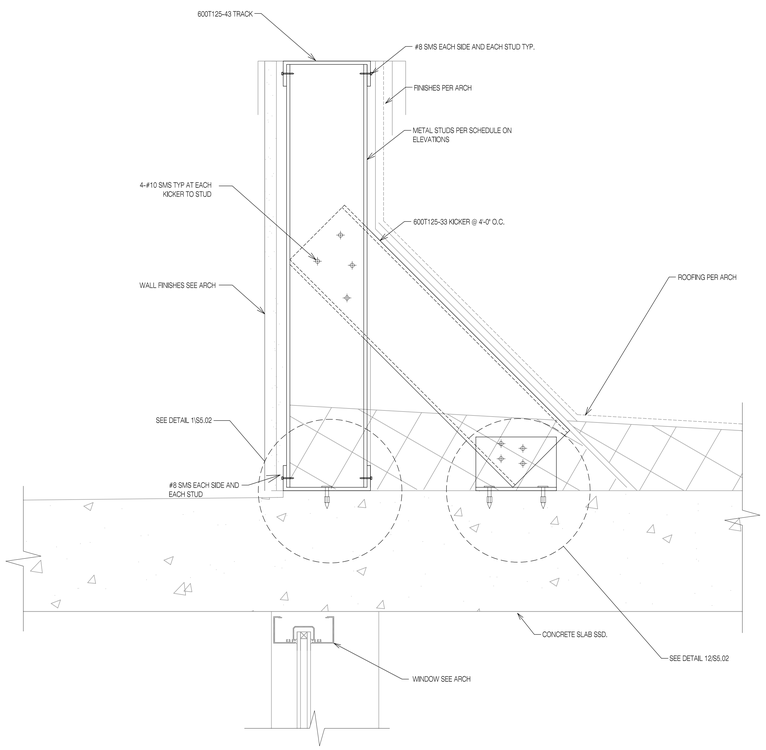

19 DETAIL
Scale: 3" = 1'-0"

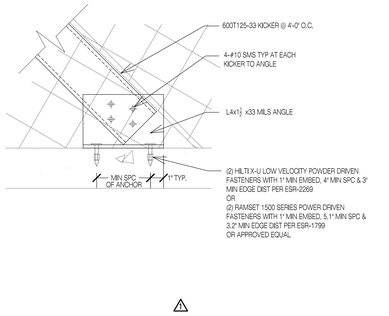

12 DETAIL
Scale: 3" = 1'-0"

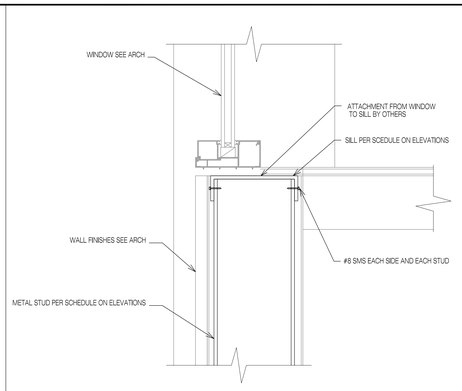

8 DETAIL
Scale: 3" = 1'-0"

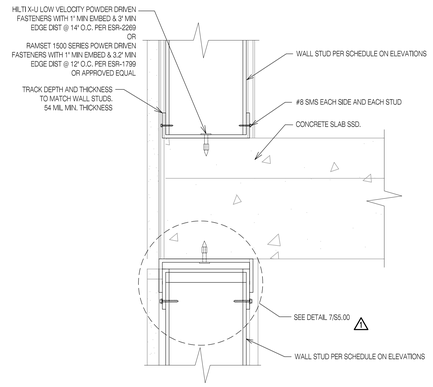

4 DETAIL
Scale: 1-1/2" = 1'-0"

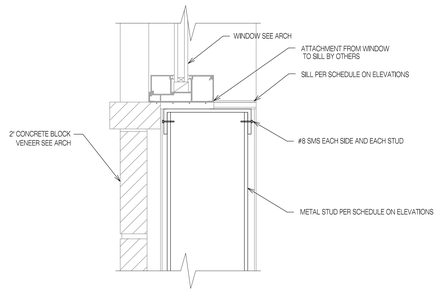

11 DETAIL
Scale: 3" = 1'-0"

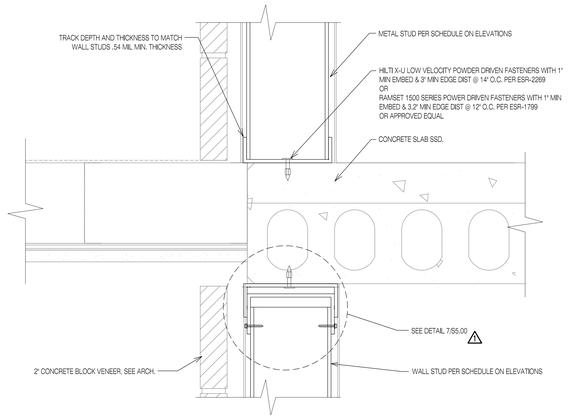

7 DETAIL
Scale: 3" = 1'-0"

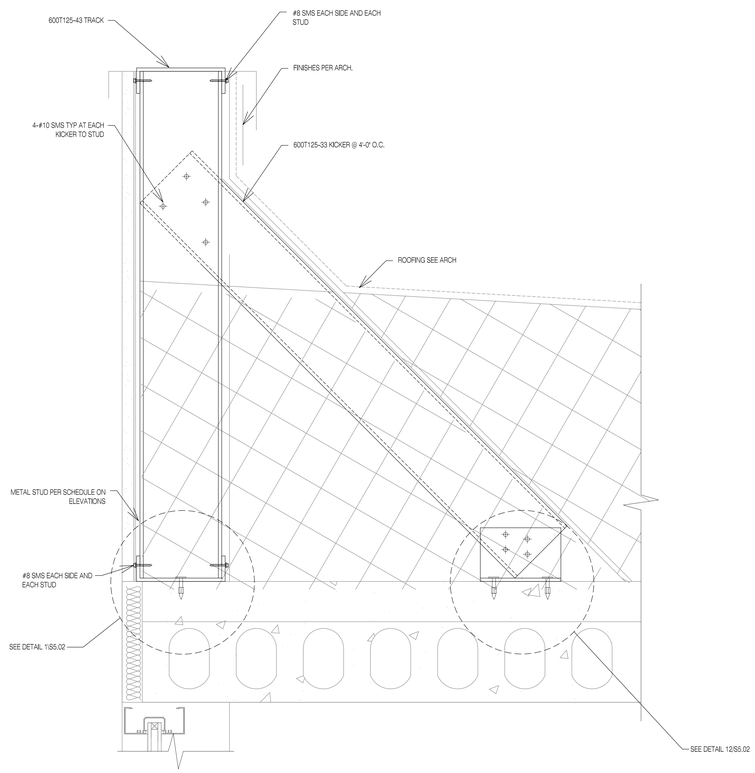

17 DETAIL
Scale: 3" = 1'-0"

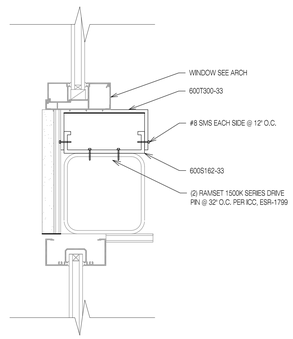

10 DETAIL
REFERENCE ARCH.
Scale: 3" = 1'-0"

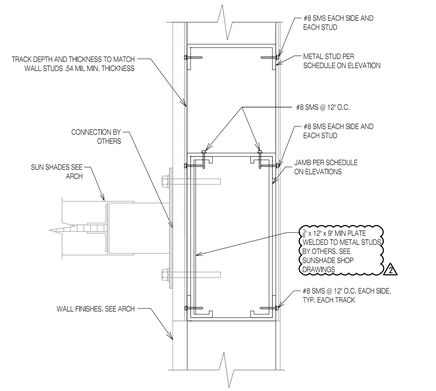

6 SUN SHADE AT JAMB DETAIL (PLAN)
Scale: 3" = 1'-0"

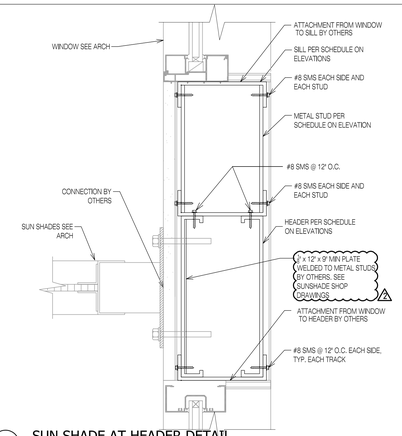

2 SUN SHADE AT HEADER DETAIL
Scale: 3" = 1'-0"

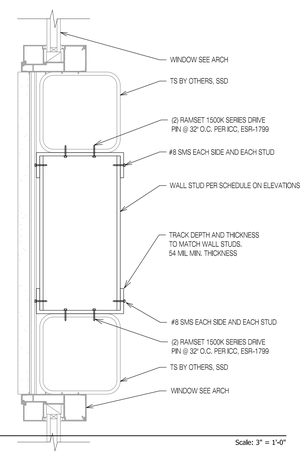

9 DETAIL
Scale: 3" = 1'-0"

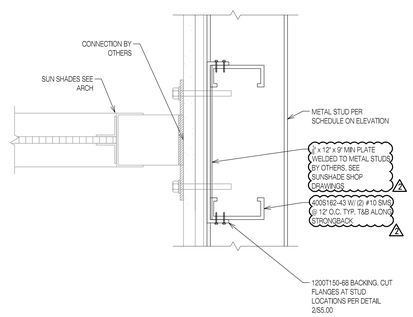

5 SUN SHADE AT STRONGBACK DETAIL
Scale: 3" = 1'-0"

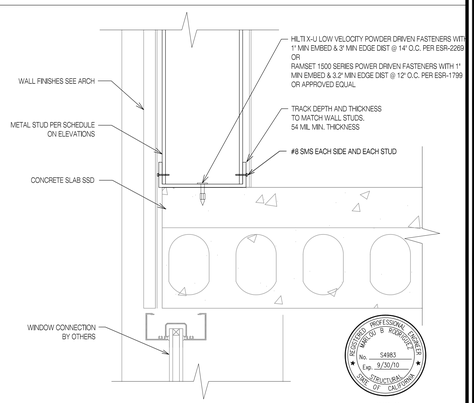

REGISTERED PROFESSIONAL ENGINEER
MICHAEL DAVID B. ROBINSON
No. S4983
Exp. 9/30/10
CIVIL STRUCTURAL
STATE OF CALIFORNIA
11/10/09

1 DETAIL
Scale: 1-1/2" = 1'-0"

REV.	DESCRIPTION	DATES:
	INITIAL SUBMITTAL	09/01/09
1	BACK CHECK COMMENTS	9/03/09
2	BACK CHECK COMMENTS	10/13/09
		11/10/09

DRAWING STATUS	DATE	INITIALS
■ SUBMITTAL		MBR
■ REDLINE COMPLETION		
■ APPROVED		
■ ISSUED FOR FABRICATION		

CONSULTANT:

I. S. A. T.
International Seismic Application Technology
42550 ALBREA ST. FREMONT, CA 94538
800-835-9841 (US) 510-226-8776 (fax)
www.isatsb.com

CSU FULLERTON
DETAILS
STUDENT HOUSING PHASE III (BUILDING A-E)
800 N STATE COLLEGE BLVD FULLERTON, CALIFORNIA 92834

SCALE:
DRAWN BY: JM
DATE: 08-15-09
SHEET #

S5.02

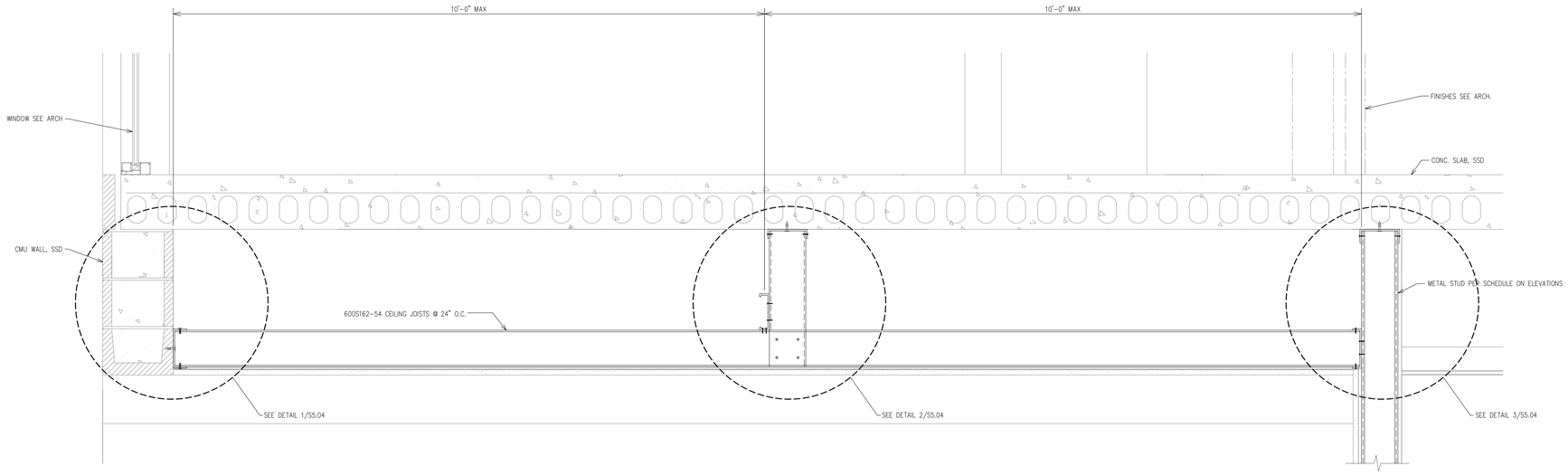

19 DETAIL

Scale: 3" = 1'-0"

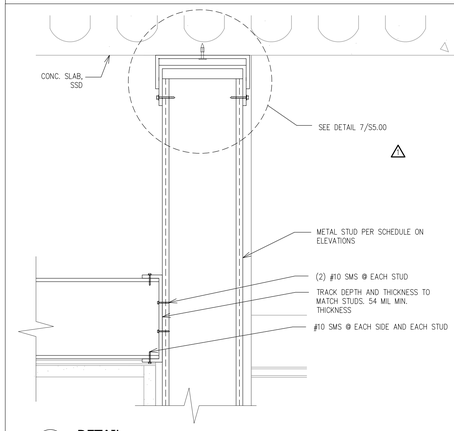

3 DETAIL

Scale: 3" = 1'-0"

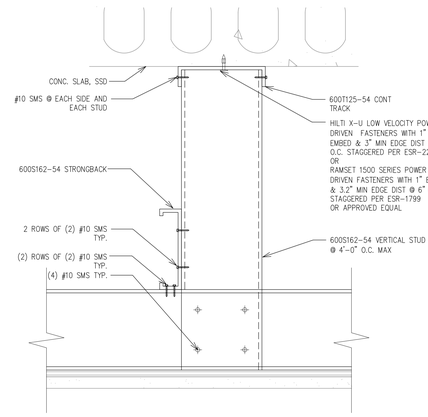

2 DETAIL

Scale: 3" = 1'-0"

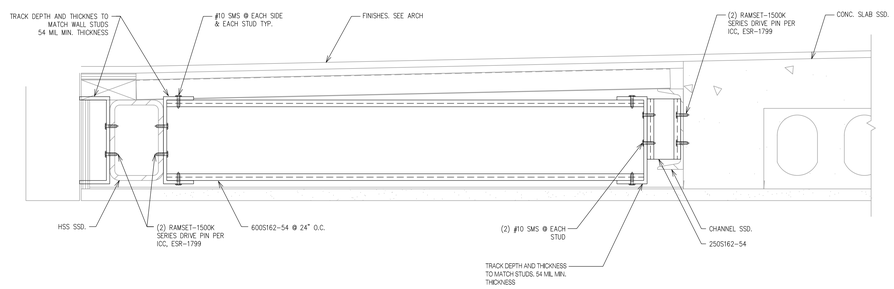

9 DETAIL

Scale: 3" = 1'-0"

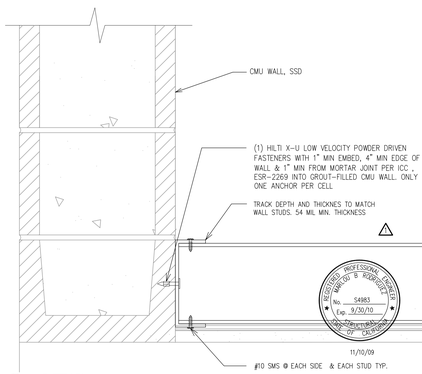

1 DETAIL

Scale: 3" = 1'-0"

REV.	DESCRIPTION	DATES:
	INITIAL SUBMITTAL	09/01/09
1	BACK CHECK COMMENTS 9/03/09	10/05/09
2	BACK CHECK COMMENTS 10/13/09	11/10/09

DRAWING STATUS	DATE	INITIALS
SUBMITTAL		MBR
REDLINE COMPLETION		
APPROVED		
ISSUED FOR FABRICATION		

CONSULTANT:

I. S. A. T.
International Seismic Application Technology
42550 ALBREA ST. FREMONT, CA 94538
800-835-9941 (US) 510-226-8776 (fax)
www.isatsb.com

CSU FULLERTON DETAILS
STUDENT HOUSING PHASE III (BUILDING A-E)
800 N STATE COLLEGE BLVD FULLERTON, CALIFORNIA 92834

SCALE:
DRAWN BY: JM
DATE: 08-15-09
SHEET #

S5.04